Scorpion Drilling Technology Ltd
CN: SC576776-Westhill-Aberdeenshire
United Kingdom

FACTORY CODE
2125-203-1900-1000

Components :

1. Top Sub	7. Spring	13.Circlip Hole
2. Roraty Sleeve	8.Polyurethane Ball	14. Trust Bearing
3. Upper Pin	9. Ball Seat	15. O-Ring
4. Middle Pin	10. Nut Sleeve	16. Sealing Ring B
5. Lower Pin	11. Central Mandrel	17. O-Ring
6.Thrust Bearing	12. Lower Sub	

Thread Connection

Upper Body	Middle Body	Lower Body
6-5/8" REG BOX	PIN x BOX	6-5/8" REG PIN

Dimension	Wight (Kg)
Diameter : 203 mm	523 Kg
Total Length Overall : 2,723 mm	

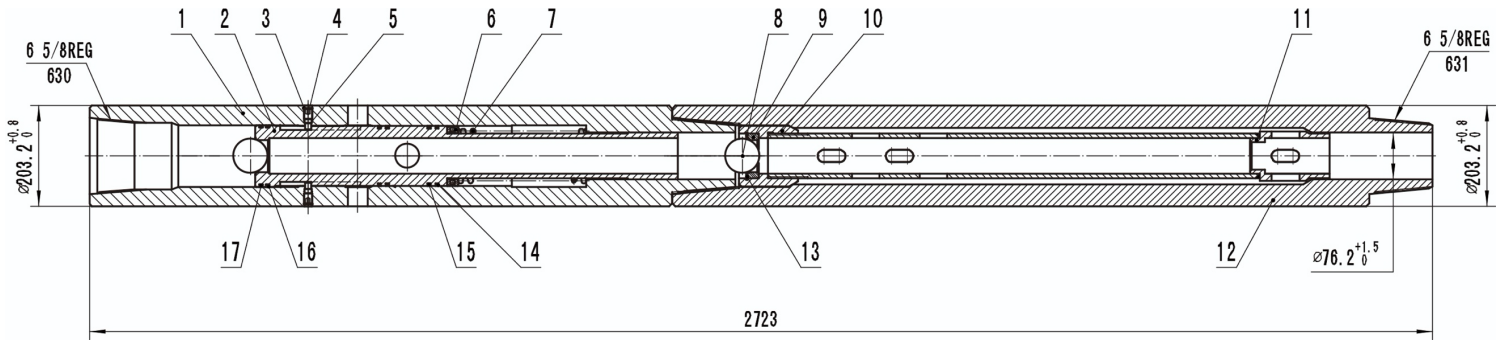

TECHNICAL DRAWING - SC-203 MULTY CIRC SUB